REV	DESCRIPTION	DATE	ECN.NO	CHANGE
X-0	New	20.08.15		Yuxiang

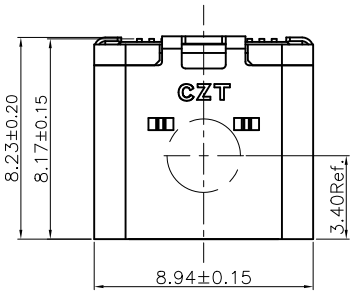

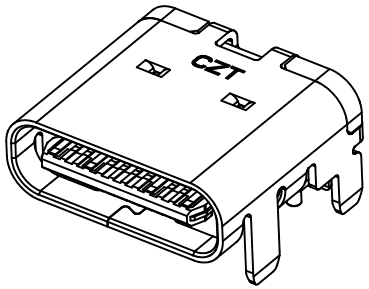

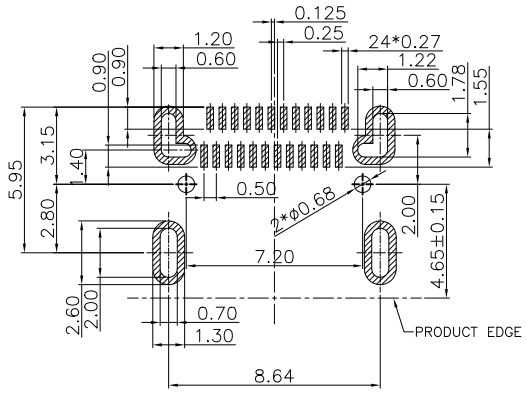

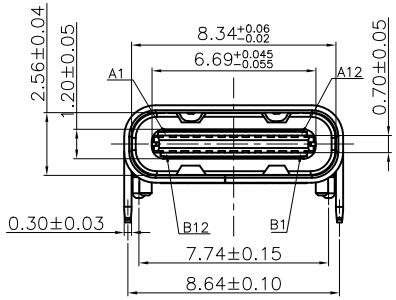

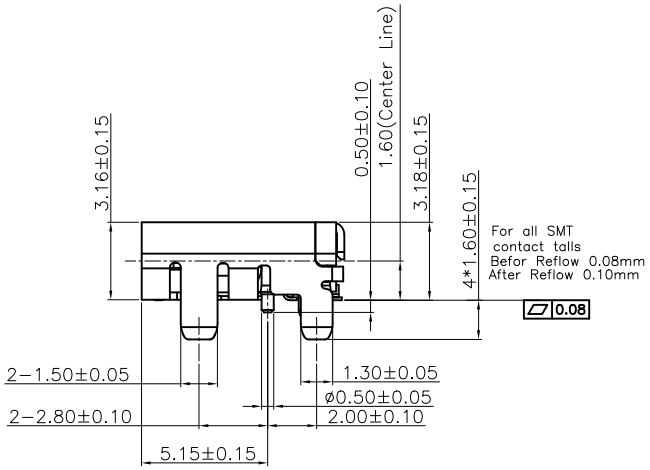

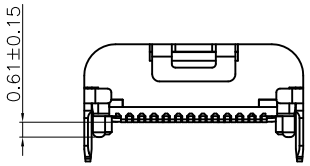

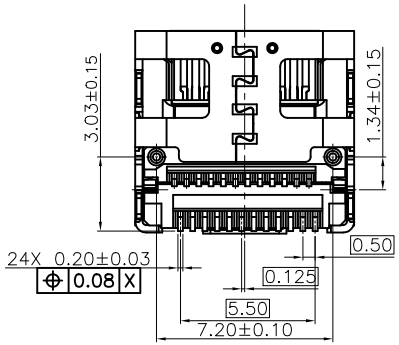

NOTE:

1.ELECTRICAL CHARACTERISTICS;

1.1 CONTACT RESISTANCE: 30mΩ Max FOR INITIAL. CHANGE 10mΩ MAX AFTER DURABILITY TEST

1.2 CONTACT CURRENT RATING: 6A FOR V_{BUS} PIN; 1.25A FOR V_{CONN} PIN.

1.3 DIELECTRIC WITHSTANDING VOLTAGE: 500V AC R.M.S.

1.4 INSULATION RESISTANCE 100MΩ Min

1.5 OPERATING TEMPERATURE: −40°C ~ 85°C

2. MECHANICAL CHARACTERISTICS:

2.1 MATING FORCE: 6~20 N.

2.2 UNMATED FORCE: INITIAL 8~20N; 5~20N AFTER DURABILITY TEST

2.3 DURABILITY: 10,000 CYCLES

CZT® DONGGUAN ZHENGDE (YIHUA) CONNECTOR CO., LTD

.X ±0.25	X.° ±2°	UNIT:	mm	DR:		TITLE:	USB TYPE C TOP MOUNT 24P FEMALE DUAL SMT	
.XX±0.20	.X° ±1°	3RD:		DE:				
.XXX±0.05	.XX° .XXX°	SCALE:	1:1	CHKD:		SHEET:	1/1	P/N: 10317124F012
CUSTOMER		REV:	X-0	APPD:		D/N:	131A-0069	M/N: